airworker

PRODUCT CATALOG



CONTENTS

ABOUT US

FIELD OPERATIONS AND CUSTOMER SUPPORT

PRODUCTS

CONTACT

ABOUT US

Airworker was founded in 2016 with the aim to become an engineering company, developing aircraft construction, offering innovative solutions and becoming a leading company in the field.

Industrial Sector

- Design and manufacture of UAVs.
- Rendering of engineering services.
- Production of products from composite materials.
- Green energy (design and production of wind turbin).
- Robotics
- Design and production of control and stabilization systems.

FIELD OPERATIONS AND CUSTOMER SUPPORT

UAV DESIGN

Our company is involved in all stages of UAV design:

- Formation of technical specifications
- Design
- Creation of technical documentation
- Prototyping
- Testing
- Certification support
- Production

TECHNICAL SUPPORT

We provide technical support for our products:

- Repair.
- Modification.
- Flight preparation.

ALL DESIGN LEVELS SUPPORT

The company provides support at all stages of the design of parts, devices and systems of varying complexity. We have been involved in projects involving communications for wind energy, optimization of metal structures for critical systems, design of radar antenna fairings, and civil infrastructure design.

We offer services such as:

- Conceptual design
- Strength analysis
- Creation of 3D models
- Drawing creation
- Creation of technical documentation

PRODUCTION

Our company has established processes for the production of complex parts and structures made of metal and composite materials. Various technologies and approaches are used in production, allowing us to address tasks related to both creating individual product prototypes and organizing serial production.

ROBOTICS

Modern systems used in civil and military sectors are quite complex, comprising mechanics, electronics, and software. Our company has accumulated significant experience in creating both the mechanical components of complex systems and specialized software.

PRODUCTS

AWC1



S-1



AW34 / AW34V



AWC2



AW15



AW5RE



AW25 / AW25V

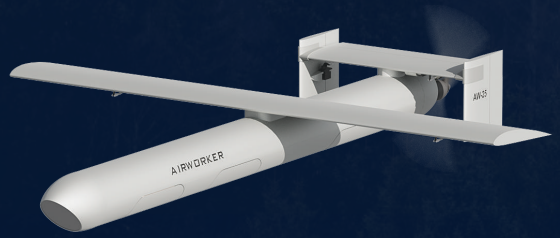

AW21

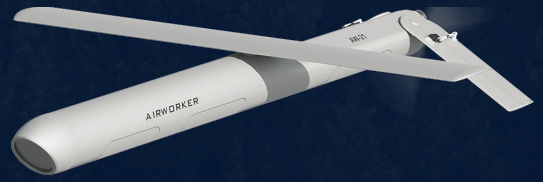

AW35



AWC1



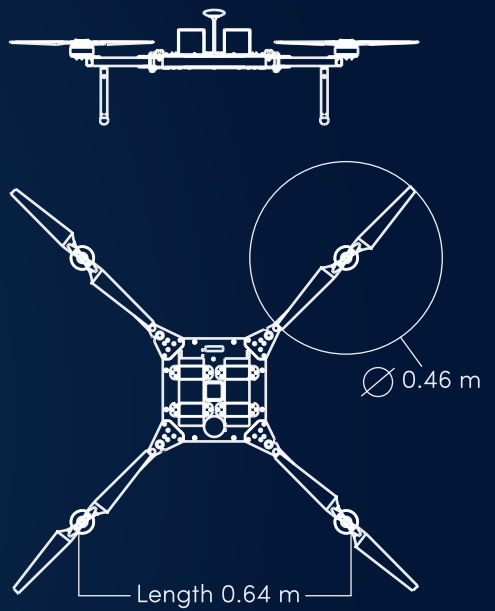

- Vertical takeoff and landing allows the UAV to be used in almost any terrain.
- The simplicity of the design allows us to produce a large number of products in the shortest possible time and without complex equipment.
- High load capacity in its class.
- Folding beams allow you to significantly reduce dimensions during transportation.
- Secure radio communication.

Range	Weight	Flight time	Maximum altitude
10 km	**7 kg**	**20-30 min**	**4000 m**

Speed	Payload	Launch	Max. wind speed
Up to 50 km/h	**2 kg**	**VTOL**	**30 km/h**

AWC2



- Vertical takeoff and landing allows the UAV to be used in almost any terrain.
- The simplicity of the design allows us to produce a large number of products in the shortest possible time and without complex equipment.
- High load capacity in its class.
- Folding beams allow you to significantly reduce dimensions during transportation.
- Secure radio communication.

Range	Weight	Flight time	Maximum altitude
10 km	**16 kg**	**20-30 min**	**4000 m**

Speed	Payload	Launch	Max. wind speed
Up to 50 km/h	**5 kg**	**VTOL**	**30 km/h**

AW25 / AW25V

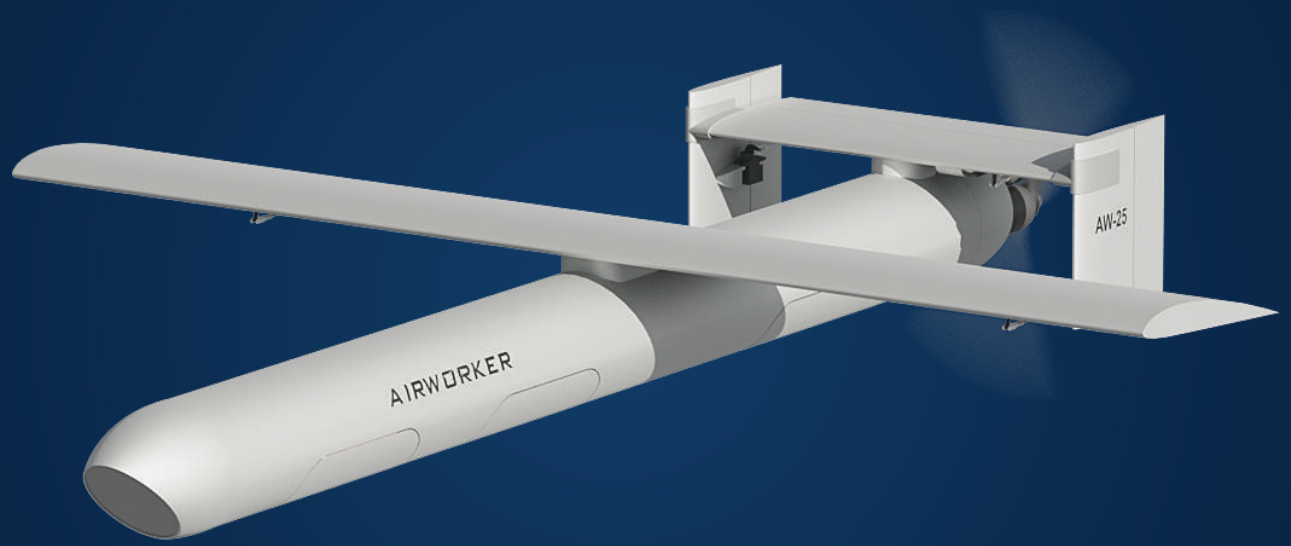

- AW25 is a man-portable fixed-wing strike (kamikaze) UAV with a range of up to 50 km, carrying a 4.5 kg fragmentation warhead. The UAV is transported in a compact container that one person can carry as a backpack, and several fit in a small cargo van or pickup truck. Launch is by booster from a ground stand.
- The operator prepares the flight plan and target coordinates on a computer or smartphone and uploads them to the autopilot. Navigation is protected against electronic warfare (EW) interference, and a secure radio link allows the operator to update target coordinates in flight. This allows the UAV to operate together with fire direction and control systems.
- AW25V is a modification of the base AW25 model, equipped with an electro-optical system (gimbal) that automatically tracks the selected target and guides the UAV onto it. Unlike the base model, AW25V carries a 3 kg warhead.

Range **50 km**	Weight **12 kg**	Flight time **40 min**	Maximum altitude **4000 m**
Speed **120 km/h**	Warhead **AW25 — 4.5 kg fragmentation** **AW25V — 3 kg**	Launch **Container Booster**	Wingspan **1.6 m**

AW35



- A two-axis stabilized gimbal equipped with a daylight camera featuring 5x optical zoom and a laser rangefinder with a range of up to 2,000 m.
- A radio communication and navigation system featuring a high level of protection against electronic warfare (EW) interference.
- Hand launching and parachute landing allow the UAV to be deployed from almost any terrain without additional equipment.
- The quick-detachable wing and stabilizer enable the UAV to be prepared for launch within seconds and help prevent potential damage during landing.
- The UAV is designed to perform real-time video reconnaissance, artillery targeting, and fire correction at distances of up to **30** km.

Range	Weight	Flight time	Maximum altitude
30 km	**4.2 kg**	**120 min**	**4000 m**

Speed	Payload	Launch	Landing
70 km/h	**Laser Rangefinder**	**By hand**	**By parachutes**

AW21

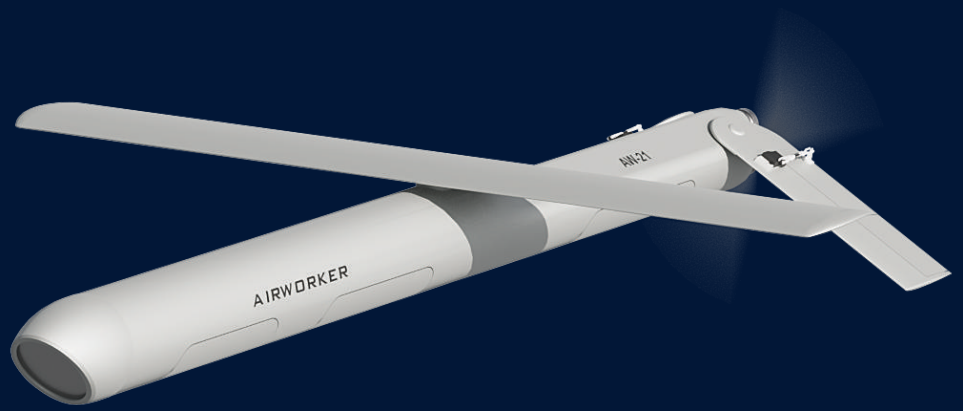

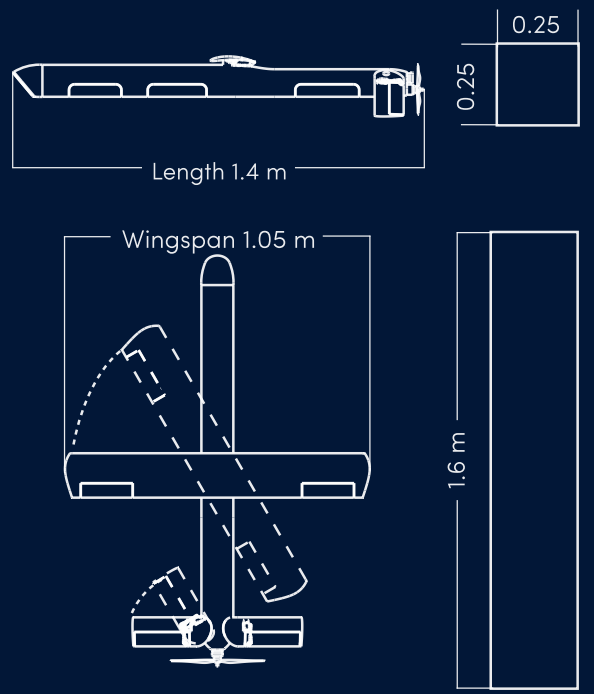

- Aircraft-type portable attack UAV (kamikaze). Designed to hit targets at a distance of up to 15 km.
- The launch is carried out from a compact container in which the wing and stabilizers of the UAV are in a folding position.
- The location of the UAV in the container ensures compactness and quick launch of the product; it is also possible to equip the launch platform with several containers with UAVs at once
- Hitting a target is possible in two ways: direct control by the operator and by automatic tracking of the specified object.
- Secure radio communication.

Range	Weight	Flight time	Maximum altitude
15 km	**5 kg**	**10-15 min**	**3000 m**

Speed	Payload	Launch	Wingspan
110-130 km/h	**Warhead 2 kg**	**Container-Catapult**	**1.05 m**

AW34



- AW34 is a fixed-wing strike UAV with a range of up to 50 km, carrying a 10 kg fragmentation warhead. It is launched by booster from a container mounted on the ground or on a vehicle.
- The flight plan and target coordinates are uploaded to the autopilot from a computer or smartphone. Navigation is protected against electronic warfare (EW) interference, and target coordinates can be changed in flight. This allows the UAV to operate together with fire direction and control systems.
- AW34V is a modification of the base AW34 model, equipped with an electro-optical surveillance system (gimbal) and a system that automatically tracks the selected target and guides the UAV onto it. Unlike the base model, AW34V carries an 8 kg warhead.

Range	Weight	Flight time	Maximum altitude
50 km	22 kg	25–30 min	4000 m

Speed	Payload	Launch	Wingspan
120-140 km/h	**Warhead** AW34 — 10 kg AW34V — 8 kg Fragmentation	**Container** **Booster**	2 m

AW15

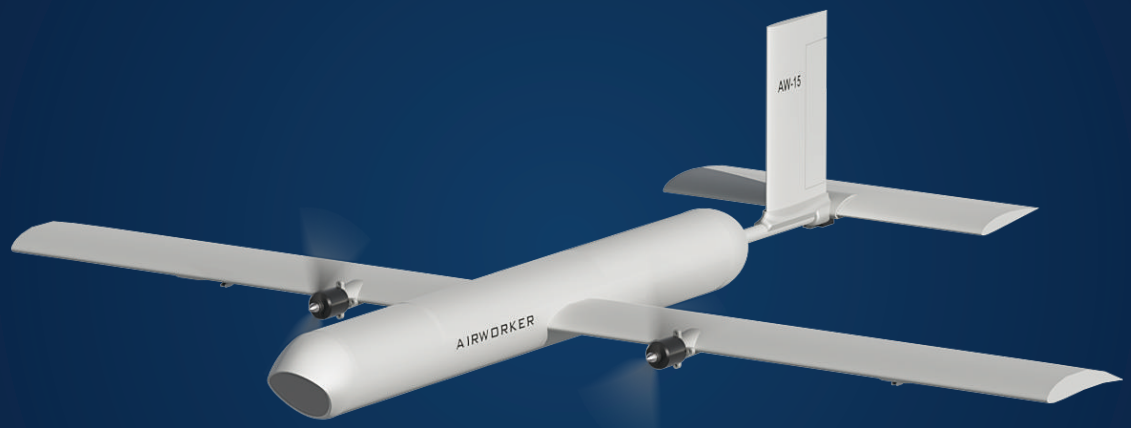

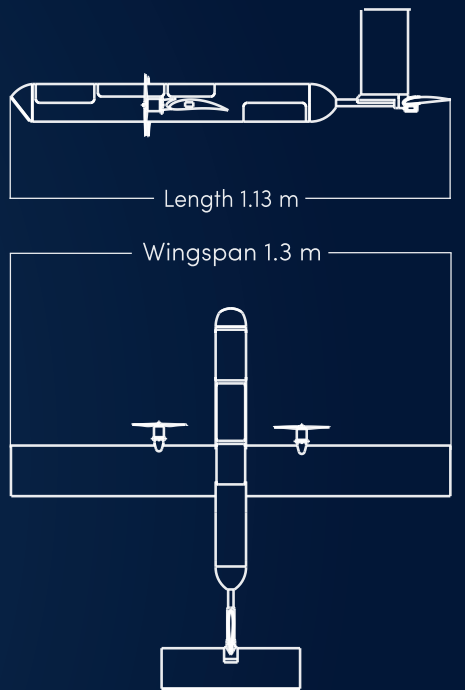

- Simplicity of design reduces the cost of UAVs and also increases maintainability.
- The UAV is intended for training and test flights.
- Ease of control and settings makes the UAV a good platform for pilot training.
- The large volume of the fuselage allows the use of equipment whose dimensions can reach up to 0.7 m.
- The ability to launch by hand and parachute landing allows to launch from almost any terrain without additional equipment.

Wingspan	Weight	Flight time	Maximum altitude
1.3 m	**2.5 kg**	**15-20 min**	**3000 m**

Speed	Payload	Launch	Landing
65-85 km/h	**0.3 kg**	**By hand**	**By parachute**

AW5RE



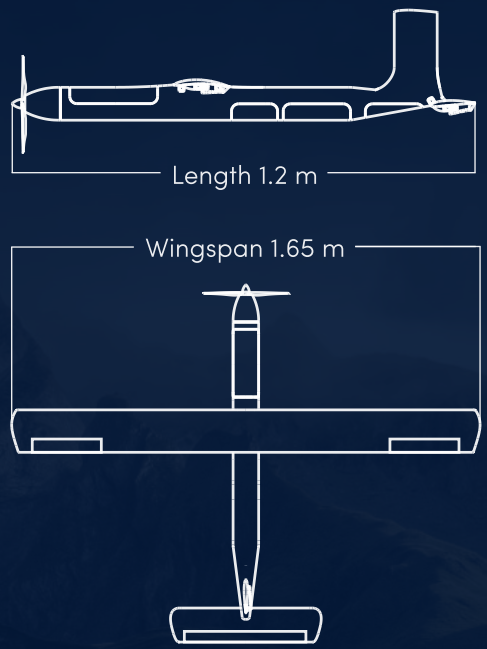

- Two types of payload: high-definition photo camera or video camera with gimball.
- Secure radio communication.
- The ability to launch by hand and parachute landing allows to launch from almost any terrain without additional equipment.
- Quick-detachable wing and stabilizer, which allows to prepare the UAV for launch in a matter of seconds and prevent possible damage during landing.
- The presence of communication with the UAV makes it possible to make adjustments throughout the flight

Range	Weight	Flight time	Maximum altitude
30 km	**3.5 kg**	**60-80 min**	**4000 m**

Speed	Payload	Launch	Landing
60-80 km/h	**Camera**	**By hand**	**By parachutes**

S-4



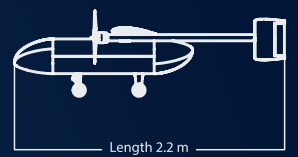

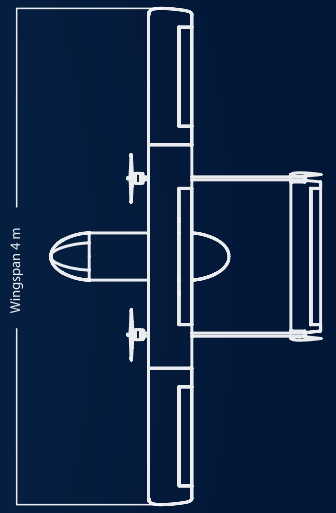

- Short takeoff and landing allow the aircraft to take off and land even on small or unpaved airfields.
- The simple design makes maintenance easy and does not require high qualifications.
- A large cargo compartment and the presence of batteries make it possible to install various equipment in addition to the transported cargo.
- The use of an electric power unit makes the flight low-noise.

Range	Weight	Flight time	Maximum altitude
100 km	**40 kg**	**50-70 min**	**4000 m**

Speed	Payload	Launch	Wingspan
100-120 km/h	**10 kg**	**Runway**	**4 m**

AW-AeroMap

UAV photo geotagging, satellite alignment and stitching in one desktop application.

AW-AeroMap is a Windows desktop application that places UAV photographs on a satellite map. It reads each photo's position and attitude from its metadata or flight log, corrects errors, and uses on-device AI to align each image precisely with the satellite imagery. Overlapping photos are stitched into a single georeferenced image for export as GeoTIFF. No internet connection, cloud service or manual control points are required. Available in Armenian, Russian and English.

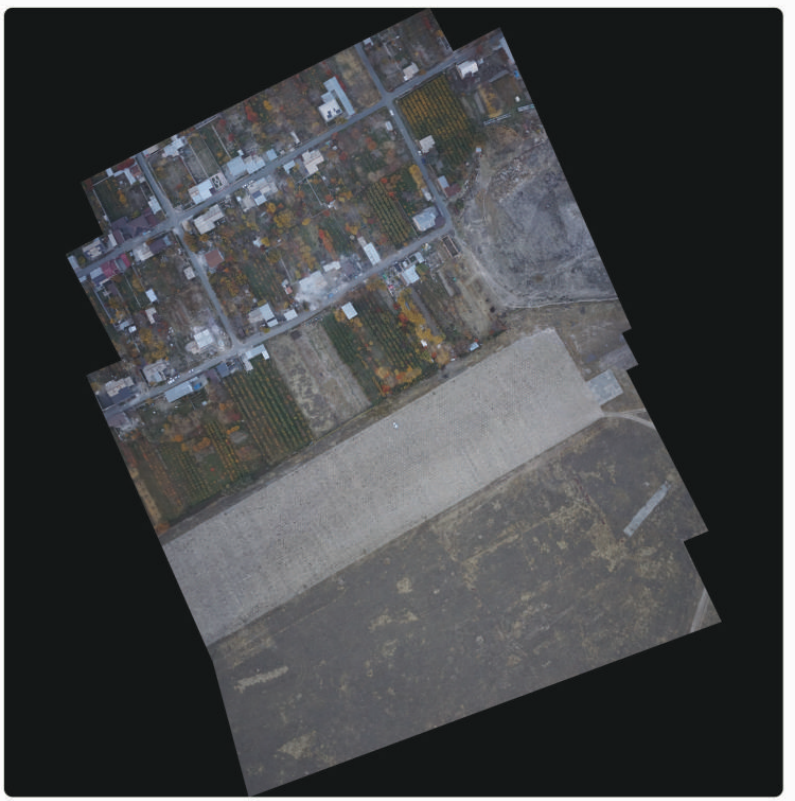

Stitching at full resolution



Automatic placement



Objects and coordinates

KEY FEATURES

01 Automatic placement
Position, heading, altitude and tilt are read from EXIF/XMP data or a DJI flight log, and each photo is placed on the map automatically.

02 On-device AI alignment
SuperPoint + LightGlue matching aligns photos to the satellite map with sub-metre accuracy. Runs entirely on the local machine.

03 Metadata validation and repair
Automatically detects and corrects metadata errors, including altitude dropouts, GPS spikes and incorrect attitude.

04 Preview before placement
Review photos before they are placed on the map.

05 Stitching at full resolution
Merges overlapping photos into one seamless georeferenced image at full source resolution.

06 Manual control
Manually adjust the placement of any frame.

07 Objects and coordinates
Mark and save objects with comments. Edit individual photos or the stitched image.

08 Offline maps and export
Download satellite, street and terrain maps for offline use. Export to GeoTIFF + JSON with georeferencing and marked objects.

WORKFLOW

1. Upload
Add photos and flight logs.

2. Placement
Photos are placed and aligned on the map automatically.

3. Review
Check placements and adjust manually if needed.

4. Stitch
Merge photos into a single image.

5. Marking
Mark objects and add comments.

6. Export
Export to GeoTIFF and JSON; download maps for field use.

AW-FlightDeck

Streamlined mission planning, pre-flight checks and protection against invalid missions.

AW-FlightDeck is ground control station software for unmanned aerial vehicles. It supports the operator through every stage of a mission, from planning to automatic flight, with built-in safety checks at each step. All critical flight information is presented on a single screen.

Multilingual interface: English, Russian and Armenian.

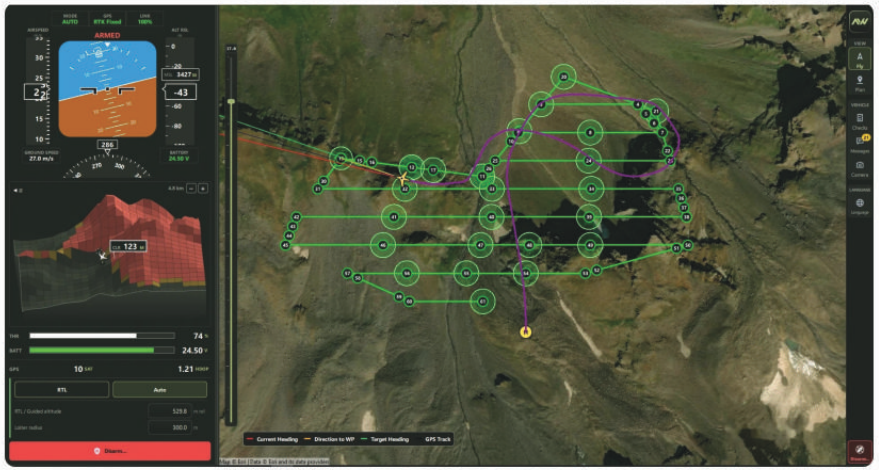

Flight screen during an automated aerial survey



Live aircraft position

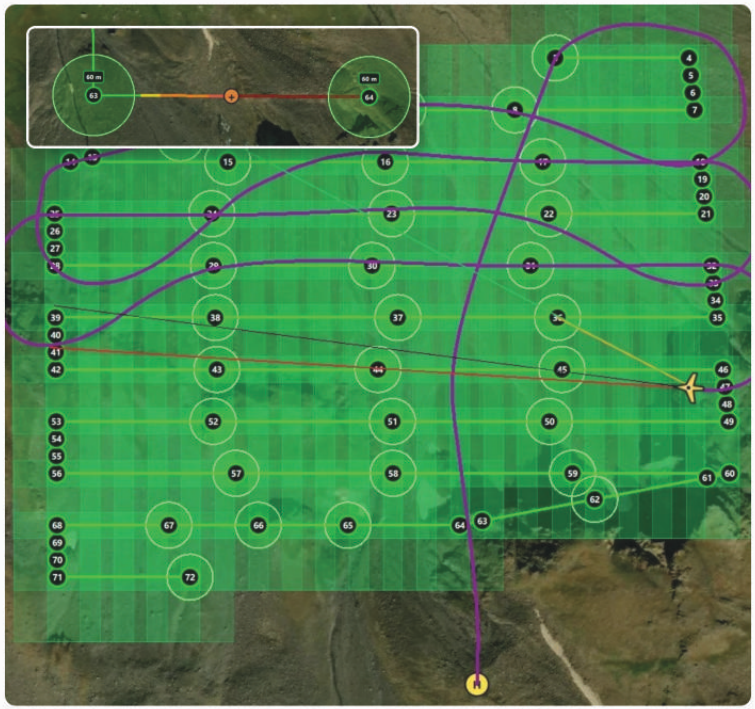

Automatically generated survey grid with the actual flight track. Inset: a route segment that failed the terrain clearance check

KEY FEATURES

Mission planning
Define the area and the software generates a terrain-aware survey grid with the required image overlap. Waypoints can be edited directly on the map.

Pre-flight check
Automated system checks and an operator checklist. Arming is blocked until every item is complete, preventing accidents caused by haste or oversight.

Primary flight display
Flight mode, GPS status, link quality, attitude, airspeed, ground speed, altitude, battery level and heading in a cockpit-style layout.

Camera control and coverage
Start and stop mission photography or capture single images; each image footprint is shown on the map.

Invalid mission protection
Every mission is validated automatically and can be uploaded to the autopilot only after it passes the check.

3D terrain model
Live 3D model of the terrain surrounding the aircraft.

Online and offline maps
Supports online maps as well as maps and elevation data pre-loaded for offline use.

WORKFLOW

1. Connect
Autopilot detected automatically.

2. Plan
Survey grid generated from the defined area.

3. Verify
Route validated against terrain and uploaded.

4. Checklist
Checks complete, aircraft armed.

5. Auto flight
Track, terrain clearance and imaging monitored live.

Science-based technologies effective solutions

+374 77 513 344
info@airworker.aero
www.airworker.aero